OPERATION & SERVICE MANUAL

Model: 01-0579-0000
Multi-Head
Mi-8, Mi-17

03/2007 – Rev. 03

When ordering replacement parts/kits, please specify model, serial number and color of your unit.

Tronair, Inc.
1 Air Cargo Pkwy East
Swanton, OH 43558

Phone: (419) 866-6301 | 800-426-6301
Web: www.tronair.com
Email: sales@tronair.com

REVISION	DATE	TEXT AFFECTED
03	03/2007	Major Revision

TABLE OF CONTENTS

PAGE

1.0 PRODUCT INFORMATION 1
1.1 DESCRIPTION 1
1.2 MODEL & SERIAL NUMBER 1
1.3 MANUFACTURER 1
1.4 SPECIFICATIONS 1
2.0 SAFETY INFORMATION 1
2.1 GENERAL 1
3.0 TRAINING 1
3.1 TRAINING REQUIREMENTS 1
3.2 TRAINING PROGRAM 1
3.3 OPERATOR TRAINING 1
4.0 OPERATION 2
4.1 PRELIMINARY CHECKLIST 2
4.1.1 Head Attachment Weldment 2
4.1.2 Sliding Pin 2
4.2 USAGE PROCEDURE 2
4.2.1 Multi-Head Attachment 2
5.0 PROVISION OF SPARES 2
5.1 SPARE PARTS 2
5.2 PARTS LISTS & ILLUSTRATIONS 2
6.0 IN-SERVICE SUPPORT 2
7.0 GUARANTEES/LIMITATION OF LIABILITY 3
8.0 APPENDICIES 3

Tronair towbars/heads must only be used with matching Tronair heads/towbars, and Tronair shear pins.

This product can not be modified without the written approval of Tronair, Inc. Any modifications done without written approval voids all warranties and releases Tronair, Inc., it suppliers, distributors, employees, or financial institutions from any liability from consequences that may occur. Only Tronair OEM replacement parts shall be used.

1.0 PRODUCT INFORMATION

1.1 DESCRIPTION

The Tronair Model 01-0579-0000 Multi-Head Towbar is a towbar head attachment for the Mi-8 and Mi-17 Aircraft.

The towbar head attachment is designed for use with Tronair Multi-Head Towbar Model 01-1202-0000 for towing the previously stated aircraft. The towbar head attachment uses a sliding pin/stationary pin arrangement to interface with the aircraft tow point.

1.2 MODEL & SERIAL NUMBER

Reference nameplate on unit

1.3 MANUFACTURER

TRONAIR, Inc.
1 Air Cargo Pkwy East
Swanton, Ohio 43558 USA

Telephone: (419) 866-6301 or 800-426-6301
Fax: (419) 867-0634
E-mail: sales@tronair.com
Website: www.tronair.com

1.4 SPECIFICATIONS

Aircraft Application: Mi-8 and Mi-17
Maximum Aircraft Gross Weight: 26,500 lbs (12,020 kg)
Dimensions: Length: 16 ¼ in (13.6 cm)
Width: 10 3/16 in (25.9cm)
Height: 4 in (10.2 cm)
Weight: 17 lbs (5.4 kg)
Finish: Blue Powder Coat

2.0 SAFETY INFORMATION

2.1 GENERAL

The Tronair Model 01-0579-0000 Towbar Head Attachment is used for towing the MI-8 and Mi-17 Aircraft only.

To ensure safe operation, please read the following statements and understand their meaning. This manual contains safety precautions, which are explained as follows. Please read carefully.

WARNING!
Warning is used to indicate the presence of a hazard that can cause ***severe personal injury, death, and/or substantial property damage*** if the Warning Notice is ignored.

CAUTION!
Caution is used to indicate the presence of a hazard, which will or can cause ***minor personal injury or property damage*** is the Caution Notice is ignored.

WARNING!

A damaged or bent towbar should not be used. Towbar should be repaired or replaced.

3.0 TRAINING

3.1 TRAINING REQUIREMENTS

The employer of the operator is responsible for providing a training program sufficient for the safe operation of the towbar.

3.2 TRAINING PROGRAM

The employer provided operator training program should cover safety procedures concerning use of the towbar in and around the MI-8 at the servicing location.

3.3 OPERATOR TRAINING

The operator training should provide the required training for safe operation of the towbar.

NOTE: Maintenance and Trouble Shooting are to be performed by the skilled and trained technician.

4.0 OPERATION

4.1 PRELIMINARY CHECKLIST

4.1.1 Head Attachment Weldment

- Check weld between connector tube and head plate for cracks.
- Check weld between side rails and head plate for cracks.
- Check weld between side rail and stationary pin for cracks.
- Check weld between side rail and sliding pin sleeve for cracks.

4.1.2 Sliding Pin

- Check sliding pin for bending or excessive wear. Ensure sliding pin slides freely.
- Check sliding pin ball lok-T pin. Ensure ball lok-T pin is securely attached to the head attachment via its lanyard.
- Ensure ball lok-T pin is not loose or missing.

4.2 USAGE PROCEDURE

4.2.1 Multi-Head Attachment

Secure the towbar head attachment using the ball lok-T pin (supplied with the multi-head towbar) onto the 01-1202-0000 Tronair Multi-Head Towbar .

- Ensure the sliding pin is locked in place using the ball lok-T pin.

CAUTION!

It is recommended that your towbar be attached to the aircraft first, and then connected to the tug to avoid possible aircraft damage.

5.0 PROVISION OF SPARES

5.1 SPARE PARTS

Spare parts may be obtained from the manufacturer:

TRONAIR, Inc.
1 Air Cargo Pkwy East
Swanton, Ohio 43558 USA

Telephone: (419) 866-6301 or 800-426-6301
Fax: (419) 867-0634
E-mail: sales@tronair.com
Website: www.tronair.com

5.2 PARTS LISTS & ILLUSTRATIONS

Reference the following page for Replacement Parts and Kits available.

6.0 IN-SERVICE SUPPORT

Contact Tronair, Inc. for technical services and information. See Section 1.3 – Manufacturer.

7.0 GUARANTEES/LIMITATION OF LIABILITY

Tronair products are warranted to be free of manufacturing or material defects for a period of one year after shipment to the original customer. This is solely limited to the repair or replacement of defective components. This warranty does not cover the following items:

a) Parts required for normal maintenance
b) Parts covered by a component manufacturers warranty
c) Replacement parts have a 90-day warranty from date of shipment

If you have a problem that may require service, contact Tronair immediately. Do not attempt to repair or disassemble a product without first contacting Tronair, any action may affect warranty coverage. When you contact Tronair be prepared to provide the following information:

a) Product Model Number
b) Product Serial Number
c) Description of the problem

If warranty coverage is approved, either replacement parts will be sent or the product will have to be returned to Tronair for repairs. If the product is to be returned, a Return Material Authorization (RMA) number will be issued for reference purposes on any shipping documents. Failure to obtain a RMA in advance of returning an item will result in a service fee. A decision on the extent of warranty coverage on returned products is reserved pending inspection at Tronair. Any shipments to Tronair must be shipped freight prepaid. Freight costs on shipments to customers will be paid by Tronair on any warranty claims only. Any unauthorized modification of the Tronair products or use of the Tronair products in violation of cautions and warnings in any manual (including updates) or safety bulletins published or delivered by Tronair will immediately void any warranty, express or implied.

The obligations of Tronair expressly stated herein are in lieu of all other warranties or conditions expressed or implied. **Any unauthorized modification of the Tronair products or use of the Tronair products in violations of cautions and warnings in any manual (including updates) or safety bulletins published or delivered by Tronair will immediately *void any warranty, express or implied* and Tronair *disclaims any and all liability for injury (WITHOUT LIMITATION and including DEATH), loss or damage arising from or relating to such misuse*.**

8.0 APPENDICIES

APPENDIX I INS-1582 Towbar Usage Instructions
APPENDIX II Declaration of Conformity

Parts List

When ordering replacement parts/kits, please specify model, serial number and color of your unit.

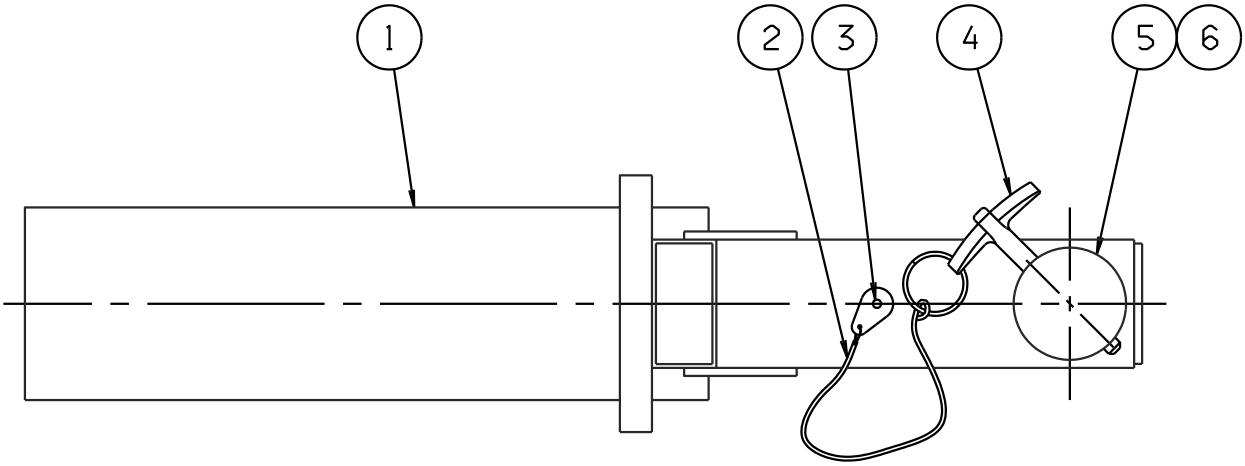

Item	Part Number	Description	Qty
	K-1129	**Kit, Sliding Pin Replacement;** *consists of:*	
5	B-108	Pin, Sliding	1
6	G-1300-19040	Pin, 3/16" diameter x 1/2" long, Roll	1
	K-1308	**Kit, Ball Loc-T Pin Replacement**; *consists of:*	
4	G-1310-0415	Pin, Ball Loc-T, 1/4 x 1.5	1
3	G-1351-04	Rivet, 1/8 Open-End Stl.	1
2	H-1026*07.0	Assembly, Lanyard	1
	K-2270	**Kit, Head Weldment Replacement;** *consists of:*	
1	Z-2812-01	Weldment, Head (includes labels)	

APPENDIX I

INS-1582
Towbar Usage Instructions

INS-1582
Towbar Usage Instructions

11/2003 – Rev. 03

Tronair, Inc.
1 Air Cargo Pkwy East
Swanton, OH 43558

Phone: (419) 866-6301 | 800-426-6301
Web: www.tronair.com
Email: sales@tronair.com

REVISION	DATE	TEXT AFFECTED	
03	11/25/03	pg 1	Warning added

Your Tronair towbar is engineered and built to the highest standards of quality and workmanship. Under normal usage and with minimal maintenance this towbar will provide exceptional service.

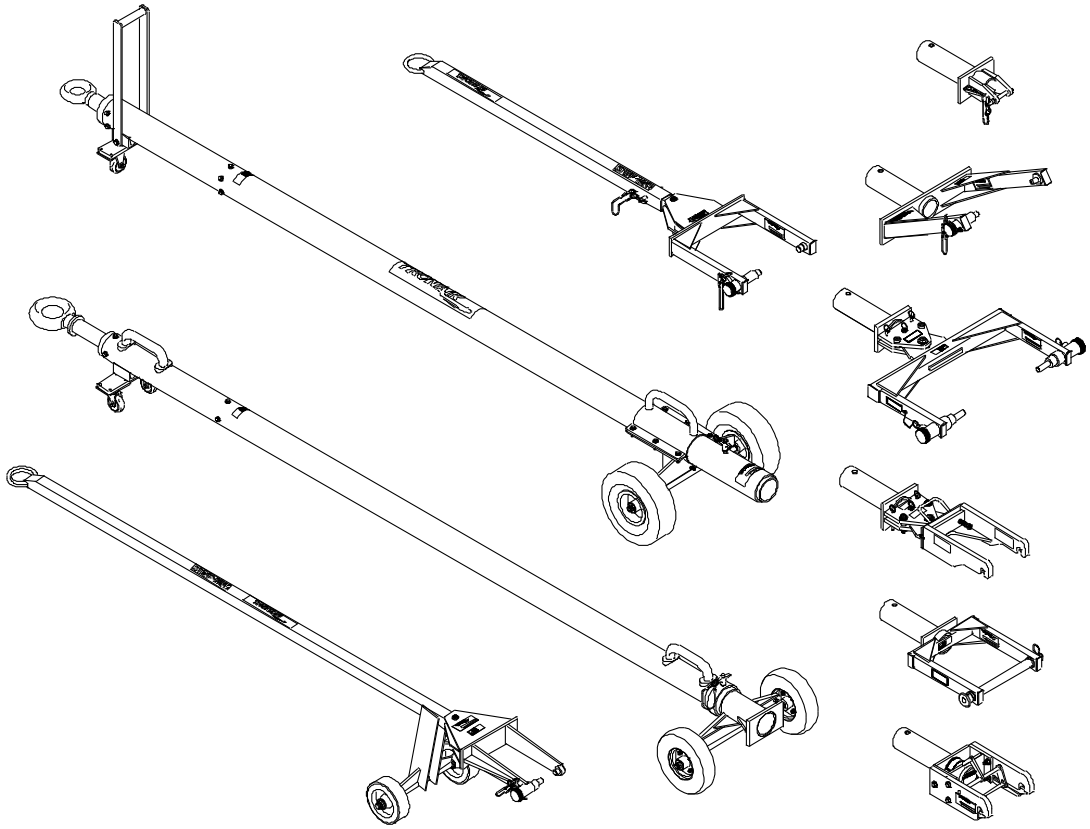

WARNING! A damaged or bent towbar should not be used, but should be repaired or replaced.

Using a damaged or bent towbar can result in aircraft or equipment damage and possible personal injury.

WARNING! Towbars With Hydraulic Lifting Mechanism:

The hydraulic lift mechanism (on those towbars so equipped) should only be used to raise the towbar to facilitate connection to the aircraft or tug.

Release any hydraulic pressure when towing aircraft or moving towbar.

WARNING! Towbars Should be Used with <u>Category 1 Tugs</u>:

Tronair recommends the use of a towbar with a category 1 or category 2 tug and aircraft not exceeding 75,000 lbs gross weight. Using the towbar with aircraft weighing in excess of this specific limitation may result in excessive loads and stresses being applied to the towbar and/or the aircraft. These excessive loads may cause failure of the towbar which could cause damage (INCLUDING WITHOUT LIMITATION to the aircraft) and/or personal injury OR DEATH. *TRONAIR MAKES NO REPRESENTATION, WARRANTY OR GUARANTEE AS TO SUCH MISUSE AND DISCLAIMS ANY AND ALL LIABILITY FOR INJURY, LOSS OR DAMAGE ARISING FROM OR RELATING TO SUCH MISUSE.*

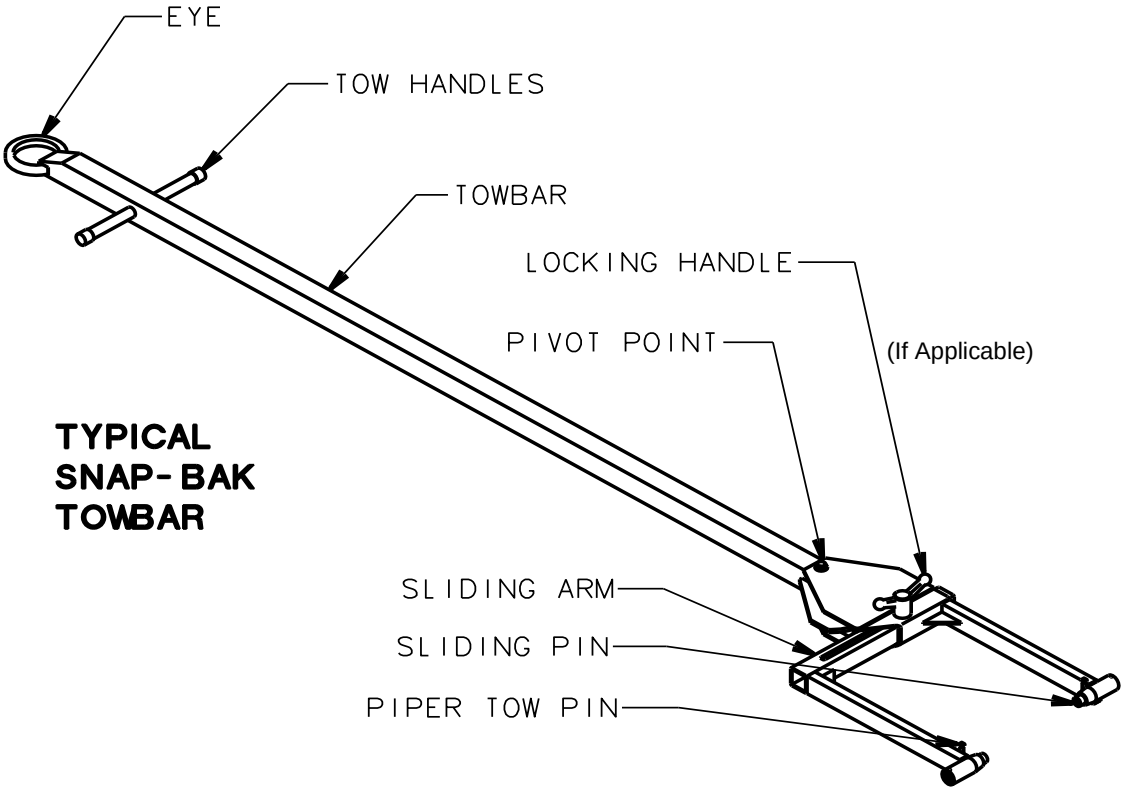

FIGURE 2

NOTE: Typical towbar. Your towbar and/or head may not have all of the features shown

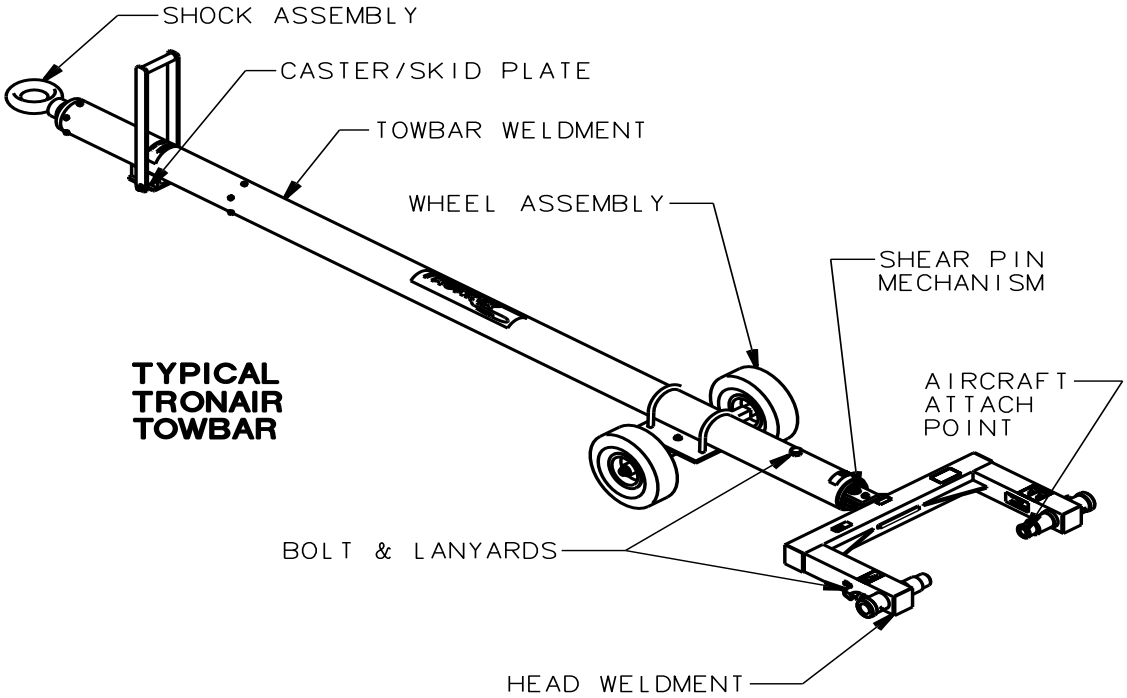

FIGURE 1

NOTE: Typical towbar. Your towbar and/or head may not have all of the features shown

BEFORE USING TOWBAR, COMPLETE THE FOLLOWING CHECKLISTS:
Reference ***Figures 1 & 2*** on Page 2.

TOWBAR:

Area of Towbar:	**Check:**
Shock Assembly:	1. Weld between eye and tube (Are there cracks?) 2. Bolts attaching shock to towbar (Loose, missing, stripped, etc.) 3. Eyebolt (Is it bent, worn down, or deformed?
Towbar Weldment: 2.	1. Tube (Is it bent, dented, bowed, and/or have cracks?) Weld at head end (Are there any cracks in the welds?) 3. Head hole (Is it elongated? Is the ball lok pin attached to the towbar?)
Caster/Skid Plate:	1. Casters (Are they missing or bent?) 2. Handles (Are they broken, bent, or missing?) 3. Bolts (Are they missing or loose?)
Wheel Assembly:	1. Wheels (Are they flat? Is the rim bent?) 2. Axle (Is it bent?)

HEAD:

Area of Head:	**Check:**
Bolts & Lanyards:	1. Are they loose, missing, or stripped? Are they attached to the head?
Weldment:	1. Welds holding side rails to head rail (Are there any cracks?) 2. Shear Plates (Are there cracks in welds? Are the plates bent?)
Shear Pin Mechanism:	1. Shear Pin (Is it bent or deformed? Are there spares?) 2. Bushings (Are they cracked, chipped, secure?) 3. Pivot Bolt (Are the nuts tight? Are there washers present?)

Area of Head:	**Check:**
Aircraft Attach Point:	1. Sliding Pin(s) (Are they bent, cracked? Do they slide freely?) 2. Locking Pin (Are they loose? Do they hold the sliding pins securely?) 3. Wear sleeves (Are the welds cracked?) 4. Roll Pins(s) (Are they rusted? Are they missing? Are they loose?) 5. Ball Lok Pin (Is it attached to head? Is it rusted? Is it bent?) 6. Axle Adapter (Is it bent? Is the slot deformed? Are bolts tight?)

SNAP-BAK AND UNIVERSAL TOWBARS:

Area of Towbar:	**Check:**
Towbar:	1. Spring (Has it taken a set? Loose in the assembly?) 2. Eyebolt (Is it bent, worn down, or deformed?) 3. Tube (Is it bent, dented, bowed, or cracked? Is it rusted badly?) 4. Welds (Are there any cracks in the welds?) 5. Head Hole (Is it elongated? Is the bolt attached correctly?)
Function:	1. Does it snap back?
Head:	1. Pivot Bolt (Is it present along with washers? Is the nut tight? Is it rusted?) 2. Roll Pin(s) (Are they rusted? Are they missing? Are they loose?) 3. Weldment (Is it deformed, bent, or rusted beyond reasonable use?) 4. Lanyard (Is it attached to weldment?) 5. Sliding Pin(s) (Are they bent, cracked or rusted? Does it slide?)

USAGE PROCEDURE
Aircraft Attachment:
It is recommended that your towbar be attached to the aircraft first, and then connected to the tug to avoid possible aircraft damage.

Ensure sliding pins are locked in place before towing aircraft.

Tug Attachment:
Damage to the towbar or aircraft can result from an excessive towbar angle during towing operations (Reference to ***Figure 3***). If aircraft with both high and low tow points are encountered, consider using two pintle hooks, as shown in ***Figures 4 & 5***, so that the towbar is as level as possible during towing. Also pintle hook height should prevent contact of towbar wheels with the ground, during towing. (Reference ***Figure 5***).

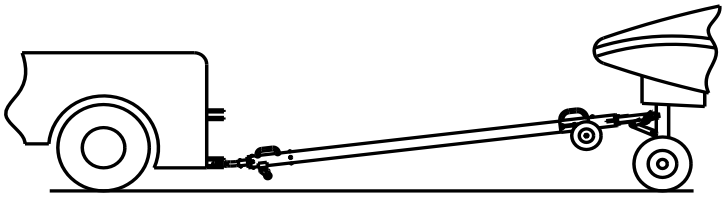

FIGURE 3 - INCORRECT

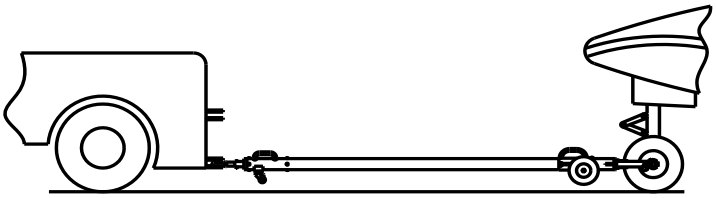

FIGURE 4 - CORRECT

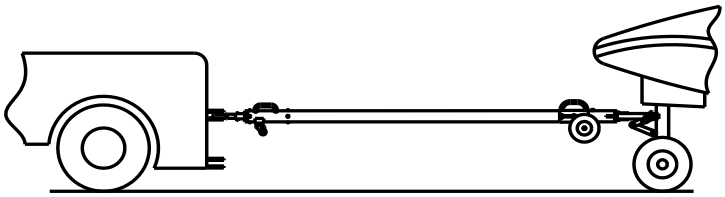

FIGURE 5 - CORRECT

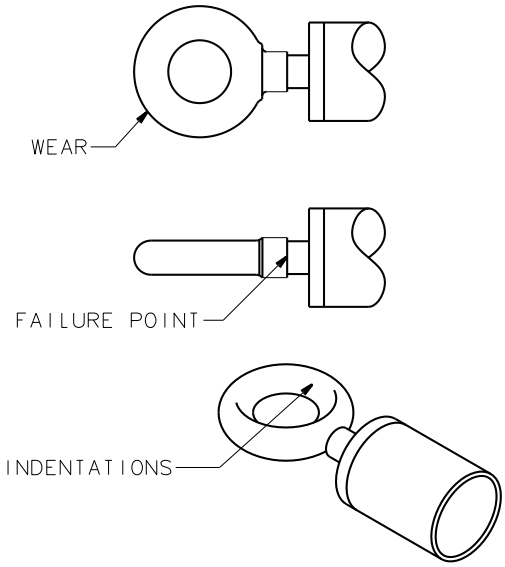

FIGURE 6

Type Of Coupler:
Damage to the towbar or aircraft can result while towing with the following type of couplers:

- Lift Head
- Standard Duty Latch
- Vertical Side Swing Latch
- Swivel Hook

These types of couplers are known to cause binding and failure in the eyebolt. Indicators of eyebolt binding are wear on the outside diameter of the eye and indentations on the inside diameter. The failure will begin at the head of the eye. See ***Figure 6***.

USAGE PROCEDURE *(continued)*
Type Of Coupler:
Damage to the towbar or aircraft can result while towing with the following type of couplers:

- Lift Head
- Standard Duty Latch
- Vertical Side Swing Latch
- Swivel Hook

These types of couplers are known to cause binding and failure in the eyebolt. Indicators of eyebolt binding are wear on the outside diameter of the eye and indentations on the inside diameter. The failure will begin at the head of the eye. See ***Figure 6***.

Figure 7 illustrates a pintle hook arrangement that is known to eliminate eyebolt binding. Tronair recommends using this type of hook on your tug.

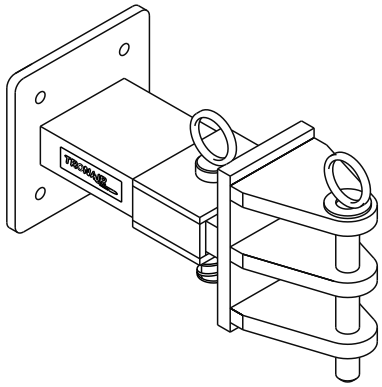

FIGURE 7

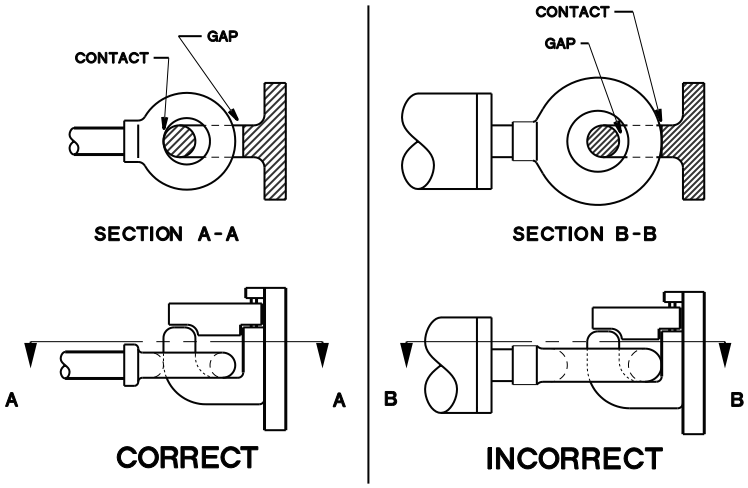

FIGURE 8

Eyebolt and Pintle Pin Size:
Damage to the towbar or aircraft can result by towing or pushing an aircraft with an incorrect size eyebolt or pintle pin. A correct size eyebolt will make contact with the pintle pin. A gap between the eyebolt outside diameter and the coupler face plate should be easily seen. An eyebolt which is too large will cause the eyebolt to make contact with the face plate of the coupler. When the eyebolt is too large for the coupler, a gap between the inside diameter of the eyebolt and the coupler face plate will be seen. See ***Figure 8***.

To ensure proper towing and pushing, check to make sure that the pintle pin diameter is not too large for the eyebolt's inside diameter. Approximately a one-half inch (1/2") gap between the pin diameter and the eyebolt should be seen. If any of these conditions are not met, please contact Tronair for information to obtain a new coupler.

Towing Angle:
Damage to the towbar or aircraft can result from pushing an aircraft while maintaining too sharp of an angle between the tug and the towbar. Contact between the towbar weldment and tug must be avoided. It is recommended that the angle between the tug and towbar not exceed 90º. See ***Figure 9***.

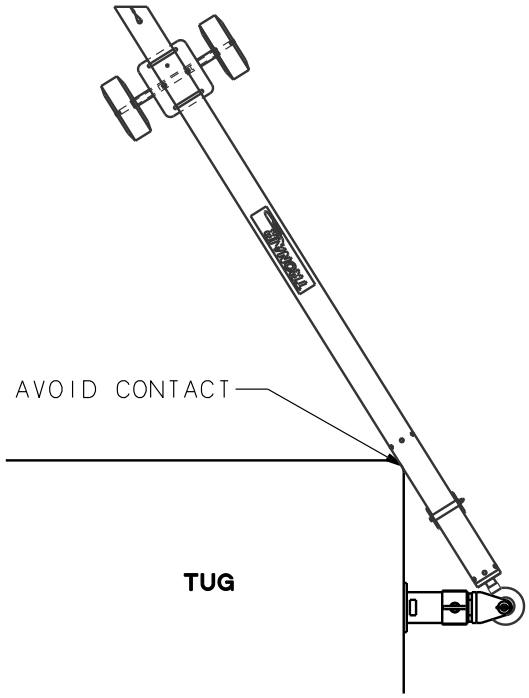

FIGURE 9

TRONAIR®

APPENDIX - II

Declaration of Conformity

DECLARATION of CONFORMITY

The design, development and manufacture is in accordance with European Community guidelines

Multi-Head
01-0579-0000

Relevant provisions complied with by the machinery:
2006/42/EC

Relevant standards complied with by the machinery:
EN ISO 12100-1

Identification of person empowered to sign on behalf of the Manufacturer:

Patrick Finch

Quality Assurance Representative

Tronair, Inc.
1 Air Cargo Pkwy East
Swanton, OH 43558

Phone: (419) 866-6301 | 800-426-6301
Web: www.tronair.com
Email: sales@tronair.com

TRONAIR® Maintenance Schedule

Standard Attachment Heads

Models:
01-0506-0000, 01-0507-0000, 01-0508-0000, 01-0511-0000, 01-0513-0000, 01-0514-0000, 01-0516-0000, 01-0518-0000, 01-0518-0010, 01-0524-0000, 01-0525-0000, 01-0529-0000, 01-0531-0000, 01-0532-0000, 01-0534-0000, 01-0538-0000, 01-0540-0000, 01-0540-0010, 01-0542-0000, 01-0542-0010, 01-0543-0000, 01-0545-0000, 01-0545-0010, 01-0545-0011, 01-0546-0000, 01-0547-0000, 01-0551-0000, 01-0551-0010, 01-0552-0000, 01-0552-0010, 01-0552-0011, 01-0556-0000, 01-0569-0000, 01-0570-0000, 01-0570-0010, 01-0571-0000, 01-0571-0010, 01-0571-0011, 01-0577-0000, 01-0577-0010, 01-0579-0000, 01-0581-0000, 01-0582-0000, 01-0582-0010, 01-0582-0000, 01-0582-0011, 01-0597-0000, 01-0598-0000, 01-0599-0000, 01-0801-0000, 01-0801-0010, 01-0802-0000, 01-0802-0010, 01-0803-0000, 01-0600-0000, 01-0608-0000

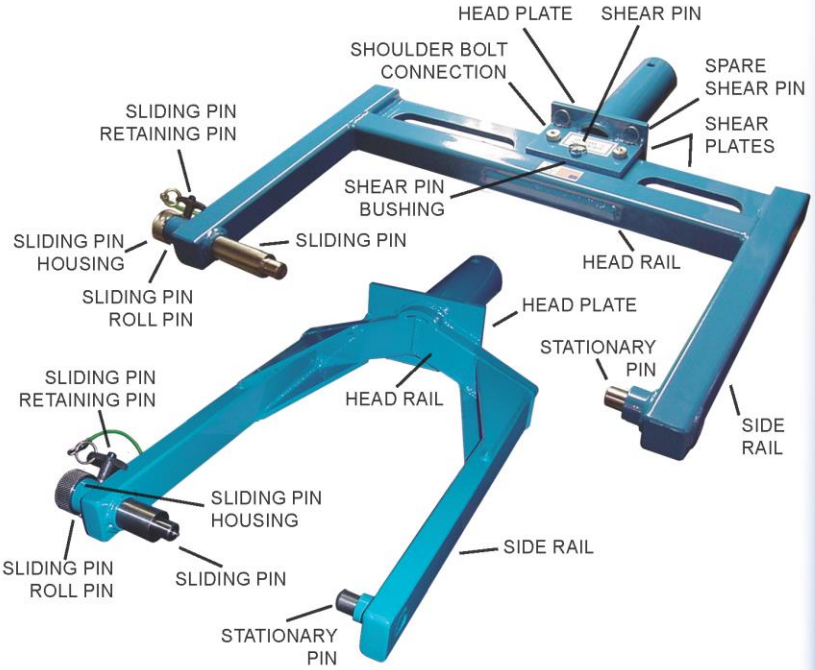

Tronair recommends towbar inspections at least once a week.

- ❑ Inspect for weld cracks. If found remove the towbar multi-head from service and contact Tronair for repair.
- ❑ Inspect the side rails, head rail, and head plate for bending. If found remove the towbar multi-head from service and contact Tronair for repair.
- ❑ For towbar multi-heads with shear, inspect the shear plates for bending. If found remove the towbar multi-head from service and contact Tronair for repair.
- ❑ Inspect the sliding pin(s) and (if applicable) the stationary pin for bending, cracks, and excessive wear. If found remove the towbar multi-head from service and contact Tronair or your Tronair distributor for replacement.
- ❑ Ensure the sliding pin(s) can move freely within its housing. If any binding occurs, inspect the sliding pin for bending and the housing for out-of-roundness. If either condition exists, contact Tronair for repair options.
- ❑ Inspect the sliding pin retaining pin assembly. Ensure the retaining pin is not missing. Ensure the retaining pin can engage the sliding pin through its housing and that it positively locks the sliding pin into place. If it does not, contact Tronair or your Tronair distributor for replacement/repair.
- ❑ Verify the sliding pin is secure to the towbar multi-head via its lanyard. Replace the lanyard if missing.
- ❑ Inspect the sliding pin roll pin (located through the sliding pin housing). Ensure the sliding pin roll pin is not loose or missing, contact Tronair or your Tronair distributor for replacement if needed.
- ❑ For towbar multi-heads with shear, check the shoulder bolt connections through the shear plates. Verify they are not clamping the shear plates together. There should not be any clamping force applied to the shear plates so the assembly functions properly. If required, back the stopnut off to remove any clamping force applied.
- ❑ For towbar multi-heads with shear, inspect the shear pin. If the shear pin is bent, broken, or missing contact Tronair or your Tronair distributor for replacement. Tronair recommends purchasing spare shear pins for rapid replacement, use only Tronair specified shear pins.
- ❑ For towbar multi-heads with shear, inspect the shear pin bushings. If the shear pin bushings are cracked or chipped, contact Tronair or your Tronair distributor for replacement, use only Tronair specified shear pin bushings.
- ❑ Inspect all steel components for signs of rust. Touch up with paint as required.

INS-1789

www.tronair.com
Tronair • Email: sales@tronair.com • Phone: 419-866-6301 or 800-426-6301 • Fax: 419-867-0634
Asia Sales Offices: **China -** Email: tronairchina@tronair.com • Phone: 86-592-5560735 • Fax: 86-592-5563132
Asia/Australia - Email: tronairasia@tronair.com • Phone: 66-2665-6511 • Fax: 66-2204-1858
Europe, Middle East & Africa Sales Office • Email: saleseurope@tronair.com • Phone: 44-0-113-245-3300 • Fax: 44-0-113-322-0436